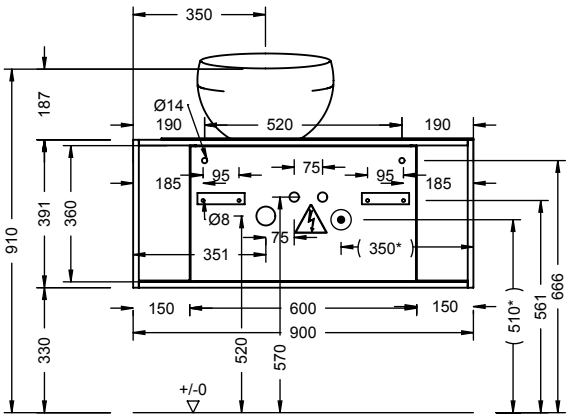

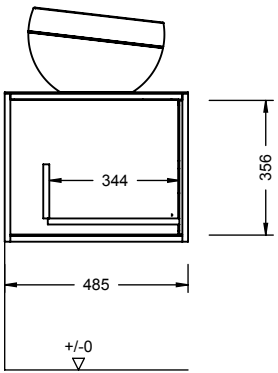

SFKF090 (L)
(*) SFKR090 (L)